APPENDIX - ALTERNATIVE POST CONSTRUCTION STORMWATER PRODUCTS

The following pages contain several proprietary products to help control, sediment, erosion, and runoff. This is just a small example of the type of products and manufacturer's available. Additional research for the most appropriate product for the certain application should be considered prior to installation. A summary of the products included;

- Snout : Oil-Water-Debris separator for inlets. There are also insert type units to retrofit existing inlets.
- Filter Sox: Can be used for vegetaeted filter strips, infiltration berms, rani gardens and basins. In addition check dams for swales. Can be placed on the existing ground to eliminate the removal of trees and established vegetation.
- Inter-locking concrete blocks: Slope protection and erosion control for banks, shorelines and swales. Can be used as an alternative to riprap to provide vegetated stable channels for area of heavy flow.
- Shoreline Protection: Techniques for stabilizing shorelines and the negative impacts of traditional approaches.
- Stabilized grass driveways/parking areas: Greener solution to stone and sand driveways and docks that provides a vegetated stable surface for vehicles, promotes infiltration and reduces sediment.

BEST MANAGEMENT PRODUCTS, INC.

The SNOUT® OIL-WATER-DEBRIS SEPARATOR SPECIFICATIONS

U.S.Patent # 6126817 Additional Patents Pending

1. PRODUCT NAME

The SNOUT® Oil-Water-Debris Separator
U. S. Patent # 6126817

2. MANUFACTURER

Best Management Products, Inc.
53 Mt. Archer Rd.
Lyme CT 06371
Phone: (800) 504-8008
Phone: (860) 434-0277
Fax: (860) 434-3195
E Mail: tjm@bmpinc.com, duran@bmpinc.com
Web site: http://www.bmpinc.com

3. PRODUCT DESCRIPTION

Basic Application: The SNOUT Oil-Water-Debris Separator is a patented plastic composite hooded outlet cover that attaches to the wall of a stormwater catch basin or other water-quality structure over the outlet pipe in such a manner as to prevent the exit of floating debris and oil.

Advantages of The SNOUT Oil-Water-Debris Separator

- Easy to install
- Easy to clean
- Very low head loss
- Reduces pipe cleaning maintenance
- Highly corrosion resistant
- Lightweight
- Converts existing structures into oil—debris trap
- Prevents siphoning of trapped contaminants
- Sizes 12" through 96" available

Composition and Materials: The SNOUT is hand fabricated from marine grade fiberglass. The attachment hardware is 18-8 stainless steel, the anti-siphon device is schedule 40 PVC and the access hatch is ABS plastic.
These materials have proven to be extremely durable and maintenance free.
The SNOUT is adaptable to any type catch basin construction and is available in flat or curved back styles.

4. TECHNICAL DATA

The SNOUT Oil-Water-Debris Separator components consist of
1) Standard size composite Hoods
2) Gasket, screw down, watertight, clean-out access port
3) Stainless steel mounting hardware
4) PVC SCH40 fittings and pipe for anti-siphon device
5) Pressure sensitive oil resistant foam rubber gasket

SNOUT composite components are hand and chopper gun laminations of these properties:

Physical Properties of Unsaturated Polyester Resin Reinforced Laminates
(33 / 66 Glass / Resin 1.5 oz mat Laminates .125 in.)

Flexural Strength (psi)	ASTM D-790	27,100
Flexural Modulus (psi)	ASTM D-790	1,157,000
Tensile Strength (psi)	ASTM D-638	16,700
Tensile Modulus (psi)	ASTM D-638	1,457,000
Tensile Elongation (%)	ASTM D-638	1.54
Hardness, Barcol 934.1	ASTM D-2583	55 - 60

Physical Properties of ISO Gel Coat

	Room Temperature Cured for 45 hours	Post Cured at 50° for 24 hours
Tensile Strength	6,218	6,581
Elongation, %	2.70	1.90
Flexural Strength, psi	11,363	11,329
Heat Distortion, °F	0.544×10^6	0.713×10^6
Mandrel Flex, Mandrel diameter in Inches	--	1.0

Sample Specification for SNOUT OIL-WATER-DEBRIS SEPARATOR:

All new and / or existing catch basin structures shall be outfitted with the BMP, Inc. SNOUT Oil-Water-Debris Separator on the exit pipe. The size and position shall be determined by pipe style and sump depth per manufacturer's recommendations. The anti-siphon device shall extend above the flood level of the structure where practical (a 12" or 24" length of vent pipe is included in the installation kit.) The hood shall be securely attached to the catch basin wall with 6-3/8" diameter stainless steel bolts and sealed to the structure with gasket material supplied in installation kit. The SNOUT Oil-Water-Debris Separator is manufactured by Best Management Products, Inc. (888-504-8008, and 800-504-8008 www.bmpinc.com)

CONFIGURATION DETAIL

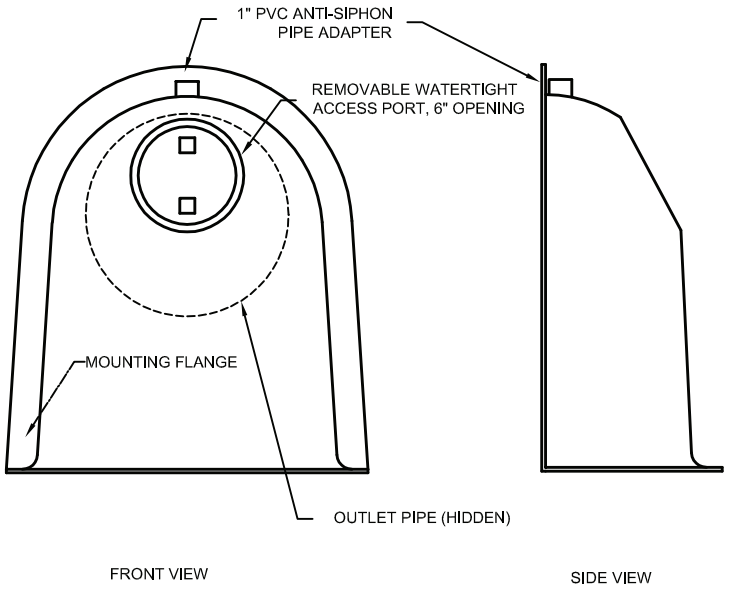

SNOUT OIL-WATER-DEBRIS SEPARATOR

TYPICAL INSTALLATION

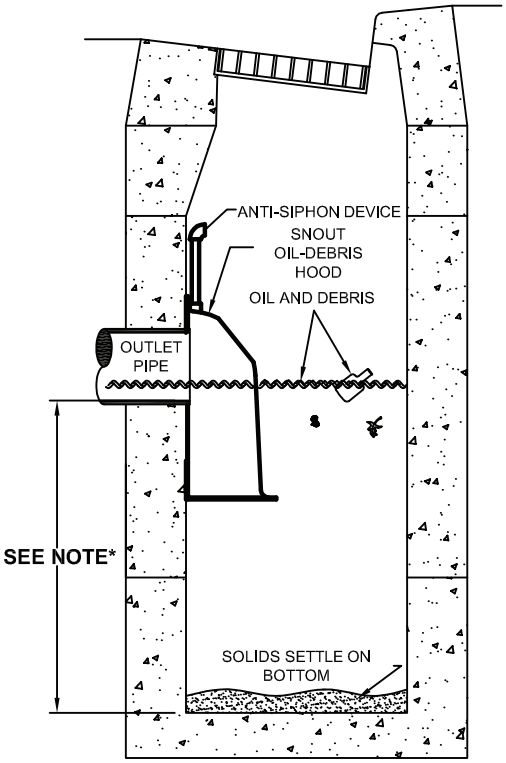

***NOTE-** SUMP DEPTH OF 36" MIN. FOR < OR= 12" DIAM. OUTLET. FOR OUTLETS >OR= 15", DEPTH = 2.5-3X DIAM.

NOTES:

1. ALL HOODS AND TRAPS FOR CATCH BASINS AND WATER QUALITY STRUCTURES SHALL BE AS MANUFACTURED BY:
   BEST MANAGEMENT PRODUCTS, INC.
   53 MT. ARCHER RD.
   LYME, CT 06371
   (860) 434-0277, (860) 434-3195 FAX
   TOLL FREE: (800) 504-8008 OR (888) 354-7585
   WEB SITE: www.bmpinc.com
   OR PRE-APPROVED EQUAL
2. ALL HOODS SHALL BE CONSTRUCTED OF A GLASS REINFORCED RESIN COMPOSITE WITH ISO GEL COAT EXTERIOR FINISH WITH A MINIMUM 0.125" LAMINATE THICKNESS.
3. ALL HOODS SHALL BE EQUIPPED WITH A WATERTIGHT ACCESS PORT, A MOUNTING FLANGE, AND AN ANTI-SIPHON VENT AS DRAWN. (SEE CONFIGURATION DETAIL)
4. THE SIZE AND POSITION OF THE HOOD SHALL BE DETERMINED BY OUTLET PIPE SIZE AS PER MANUFACTURER'S RECOMMENDATION.
5. THE BOTTOM OF THE HOOD SHALL EXTEND DOWNWARD A DISTANCE EQUAL TO 1/2 THE OUTLET PIPE DIAMETER WITH A MINIMUM DISTANCE OF 6" FOR PIPES <12" I.D.
6. THE ANTI-SIPHON VENT SHALL EXTEND ABOVE HOOD BY MINIMUM OF 3" AND A MAXIMUM OF 24" ACCORDING TO STRUCTURE CONFIGURATION.
7. THE SURFACE OF THE STRUCTURE WHERE THE HOOD IS MOUNTED SHALL BE FINISHED SMOOTH AND FREE OF LOOSE MATERIAL.
8. THE HOOD SHALL BE SECURELY ATTACHED TO STRUCTURE WALL WITH 3/8' STAINLESS STEEL BOLTS AND OIL-RESISTANT GASKET AS SUPPLIED BY MANUFACTURER. (SEE INSTALLATION DETAIL)
9. INSTALLATION INSTRUCTIONS SHALL BE FURNISHED WITH MANUFACTURER SUPPLIED INSTALLATION KIT.
   INSTALLATION KIT SHALL INCLUDE:
   A. INSTALLATION INSTRUCTIONS
   B. PVC ANTI-SIPHON VENT PIPE AND ADAPTER
   C. OIL-RESISTANT CRUSHED CELL FOAM GASKET WITH PSA BACKING
   D. 3/8" STAINLESS STEEL BOLTS
   E. ANCHOR SHIELDS

US Patent # 6126817

INSTALLATION DETAIL

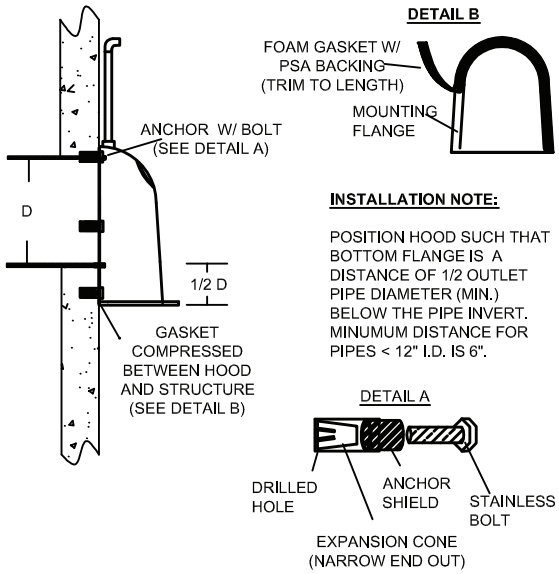

INSTALLATION NOTE:

POSITION HOOD SUCH THAT BOTTOM FLANGE IS A DISTANCE OF 1/2 OUTLET PIPE DIAMETER (MIN.) BELOW THE PIPE INVERT. MINUMUM DISTANCE FOR PIPES < 12" I.D. IS 6".

HOOD SPECIFICATION FOR CATCH BASINS AND WATER QUALITY STRUCTURES

DESCRIPTION	DATE	SCALE
OIL- DEBRIS HOOD SPECIFICATION AND INSTALLATION (TYPICAL)	09/08/00	NONE
	DRAWING NUMBER	
	SP-SN	

Microbial FilterMitt™ Berm
2:1 Slopes or Greater
2:1 Slopes or Less

Certified Phase II Stormwater Products
Microbial *FilterMitt™* Berm

QUICK REFERENCE GUIDE

Microbial *Filtermitt™*	Used for	Vegetated Permanent erosion control
Microbial *Filtermitt™* Berm	Used for	Vegetated Permanent erosion control where a large range of anticipated water flow is expected
Microbial and *PowerBoost™* Mulch *EarthBlanket™*	Used for	Vegetated Permanent erosion control to prevent sheet flow, Stabilizes soil and prevents sediment loss on slopes of varying steepness.
Sediment *Filtermitt™*	Used for	Un-vegetated temporary erosion control
Sediment *Filtermitt™* Berm	Used for	Un-vegetated temporary erosion control where a large range of anticipated water flow is expected
Sediment *EarthBlanket™*	Used for	Un-vegetated temporary erosion control to prevent sheet flow, Stabilizes soil and prevents sediment loss on slopes of varying steepness.
Topdressing	Used for	Enhancing soil structure and performance to hold moisture while increasing the soils organic matter.
Microbial Inoculants	Used for	Soil to add a large number of beneficial microorganisms into the soil. Microbial Inoculants helps improve soil structure, fertility, and, ultimately, plant health, also inhibit diseases. Used in storm water management to remediate persistent hydrocarbons which contaminate sediments found in storm water by renewing the populations of active beneficial microorganisms.
Environmental fence	Used for	Protection of storm water management products, keeping intruders out of the wetlands, also allowing wildlife access to their habitat.

Certified Phase II Stormwater Products
Microbial *FilterMitt™* Berm

COMPOST PRODUCTS

EarthBoost™	Used for	Topdressing, potting mixes, gardens, and prescription soil blending.
PowerBoost™ Mulch	Used for	Useful in light erosion applications on gentle slopes, flat areas, or where lower water flows are anticipated. It also ideal for use as decorative and functional mulch for annuals, perennials, shrubs, and trees.
FiberRoot™ Mulch	Used for	Erosion control applications Microbial and Sediment *FilterMitt™* *EarthBlanket™*, also for woodland plant mulch.

EarthBlanket™ DEPTHS FOR VARIOUS RAINFALL RATES

Annual Rainfall Flow Rate	Total Precipitation (Rainfall Erosivity Index)	*EarthBlanket™* Depth (Vegetated Surface)	*EarthBlanket™* Depth (Unvegetated Surface)
Low	1 - 25 inches (20 – 90)	½ - ¾ inch (12.5 – 19mm)	1 – 1½ inches (25 – 37.5mm)
Average	26 – 60 inches (91 – 200)	¾ - 1 inch (25 – 50mm)	1½ - 2 inches (37 – 50mm)
High	> 51 inches (> 201)	1 - 2 inches (25 – 50mm)	2 – 4 inches (50 – 100mm)

Certified Phase II Stormwater Products
Microbial *FilterMitt*™ Berm

SLOPES, SLOPE LENGTHS, and *Filtermitt*™ DIAMETERS

Step 1: Select annual rainfall flow rate from charts below.

Annual Rainfall/Flow rate	Precipitation/Year (Rainfall Erosivity index)	*Filtermitt*™ Diameter (inches)
Low	1in. to 25 in.	12”
Average	26 in. to 50 in.	12” or 18”
High	51 in. and above	18”

State	Annual Rainfall In./yr. 2007
Massachusetts	43.84
Maine	43.52
Connecticut	44.39
New Hampshire	36.53
Vermont	33.69
Rhode Island	41.91

Step 2: Pick slope angle and length for job.

Slope angle	Slope Length (feet)	*Filtermitt*™ Diameter (inches)
<50:1	250’ or less	12
50:1–10:1	125’ or less	12
10:1–5:1	100’ or less	12
3:1–2:1	50’ or less	18
>2:1	25	18

Step 3: Pick *Filtermitt*™ diameter.

Note: For areas not accessible by truck, use Alternative method which can be carried by hand.

Note: *Filtermitts*™ Berms are used in areas where greater water flow is anticipated, used in conjunction with *Filtermitts*™ .

Certified Phase II Stormwater Products

Summary of All Microbial *FilterMitt*™ Berm Detailed Drawings

2:1 Slope or Less

Fig. 1

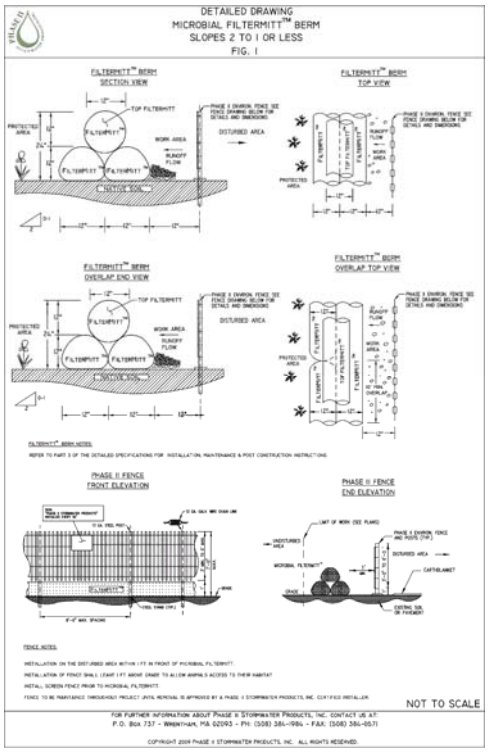

2:1 Slope or Greater

Fig. 2

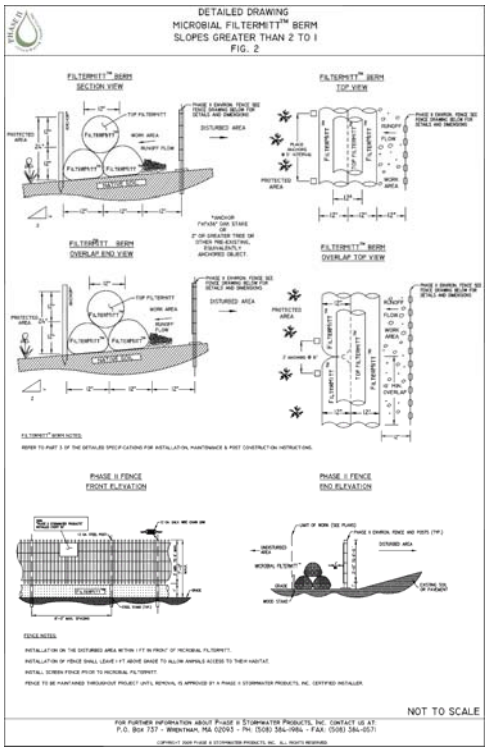

Certified Phase II Stormwater Products
Microbial *FilterMitt™* Berm

GENERAL DESCRIPTIONS

Page

PART 1. – GENERAL

M 101	**General Descriptions**	7
M 102	**Material Inspection**	9
M 103	**Monitoring & Documentation**	10

PART 2. – PRODUCTS

M 201	**Table 1.**	**Performance & Design Specifications Microbial *FilterMitt™* Berm**	11
M 202	**Table 2.**	**Physical & Chemical Specifications Microbial *FilterMitt™* Berm**	13
M 203	**Table 3.**	**Biological Requirements Microbial *FilterMitt™* Berm**	14

PART 3. – INSTALLATION, MAINTENANCE, & POST CONSTRUCTION Microbial *FilterMitt™* Berm

M 301	**Material**	15
M 302	**Installation**	16
M 303	**Maintenance**	17
M 304	**Post Construction**	18

PART 4. – DETAILED DRAWINGS

Microbial *FilterMitt™* Berm Figures 1 & 2	19

Certified Phase II Stormwater Products
Microbial *FilterMitt™* Berm

PART 1. GENERAL DESCRIPTION Microbial *FilterMitt™* Berm

M 101-1 MATERIAL:

A. Microbial *FilterMitt™* Berm:
Detains sediment, absorbs orders and degrades volatile organic compounds allows water by-pass, and is a food resource for beneficial microorganisms, which remediate by metabolizing wood preservatives, petroleum products, pesticides
And both chlorinated and non chlorinated hydrocarbons in stormwater runoff from reaching water resources, prevents erosion and silting on embankments parallel to creeks, lakes, and rivers, prevents erosion and turf loss on roadsides, hillsides, playing fields, and golf courses.

B. Beneficial Microorganism Inoculation:
Need to meet the Phase II Stormwater Products standards. See table 3.

C. Fence:
Use a Certified Phase II Stormwater Products Professional. See Fig. 1 & 2.

M 101-2 INSTALLATION:

A. All Microbial Phase II Stormwater Products application/installation must be done by a certified Phase II Stormwater Products installer.

B. All invasive removals must be done by a Phase II Stormwater Products professional.

C. All Microbial Phase II Stormwater Products application/installation should be used for pre-construction, construction and post-construction.

D. Fence should be installed 1 Foot in front of *FilterMitt™* Berm See Fig.1 & 2.

M 101-3 MAINTENANCE:

A. Apply beneficial microorganisms to the Certified Phase II Stormwater device every two months during the growing season to assure that the beneficial microorganisms meet the desired range as described in the Certified Phase II Stormwater Products specifications. Only when meeting these desired ranges can you be sure the Phase II Stormwater Product is remediation persistent contaminated pollutants found in the stormwater, as well as improving soil structure, and hydrological conductivity.

B. Apply beneficial microorganisms to improve the vigor and vitality of either planted or existing vegetation.

C. Remove any solid particles that have accumulated to one half the effective height of the stormwater filtering device.

D. Remove any invasive exotic or native vegetation that maybe disturbing the functioning of the stormwater filtering device.

PART 1. GENERAL (Continued)

M 101-4 BENEFICIAL MICROOGRANISMS INOCULATION:

A. Improve soil pore space – Increases water infiltration.
B. Feed on pollutants – Reduces contamination of water resources.
C. Increase soil surface tension- Reduces movement of soil particles.
D. Increase water storage in soil – Reduces water usage.
E. Increase carbon storage in soils – Helps clean air.
F. Improve plant nutrients uptake – Establishes healthier plants.

M 101-5 INVASIVE REMOVAL:

A. Our recommendations prior to permit approval and prior final inspection, is to have a storm water maintenance plan that maintains the biology and removes the invasive for clean water & soil. The invasive cause destruction of our natural areas and threaten the biodiversity of our native plant species by taking up their places, and limiting how they function in the native ecosystem.

M 101-6 USE:

A. Check dam & dikes.
B. Permanent & temporary erosion protection.
C. Vegetation & soil amendment.
D. Where a large range of anticipated water flow is expected.

PART 1. GENERAL INSPECTION

M 102 – 1 MATERIAL INSPECTION:

A. Installation Contractor submits a sample of materials [1 gallon] to a Certified Phase II Stormwater Products Testing Lab.

B. The "Certified Phase II…" Will send the Installation contractor, either a "Certificate of Materials Approval" or a list of recommendations that when completed as described will bring the existing materials into compliance with the criteria as set forth for Certified Phase II Stormwater Products.

C. Upon receipt of "Certificate of Materials Approval" from a Certified Phase II Stormwater Products Testing Lab, the Installation Contractor will submit copies of the "Certificate " to the design professional, the regulating agency, and the property owner, or whoever submitted the permit.

D. The Installation Contractor will notify the Regulating Agency of the time and day the work will begin.

E. A sample of the Materials On-Site will be taken by a Certified Professional Phase II Stormwater Inspector, to verify that the materials that were "Certified" are the materials that are being installed.

F. The methods and procedures of the installation of the materials, as designed and specified in the Stormwater Pollution Prevention Plan will also be inspected, to assure that the installation also is in compliance.

PART 1. GENERAL

M 103-1 MONITORING and DOCUMENTATION

A. The property owner or site contractor is required to monitor the stormwater control device after every significant rain event, as specified and designed in the SWPPP

B. If it has been discovered that there were failures either due to the design or the installation of the devices, a written, dated document, and photos are to be placed on file.

C. The site contractor is to follow up with a Certified letter to the design professional and the installation contractor, stating the date, and the location of the failure, preferably accompanied with a photo description of the problem, requesting a site visit to resolve these issues within a timely manner.

.

D. The stormwater control devices are to be inspected periodically to assure that they meet all project requirements as described in the Certified Phase II Stormwater Products Manual and by a Certified Phase II Stormwater Professional Inspector.

Certified Phase II Stormwater Products
Microbial *FilterMitt™* Berm

PART 2

M 201-1 PERFORMANCE and DESIGN SPECIFICATIONS

TABLE 1

Performance Design Diameter	**2 – 18" on bottom 1 – 8" on top**	**Testing Lab Reference**
Effective Height	21.5" plus or minus 1"	Phase II Stormwater Products, Inc. Lab
Effective Circumference	68"	Phase II Stormwater Products, Inc. Lab
Density dry	122 Lbs/per linear ft.	Phase II Stormwater Products, Inc. Lab
Maximum Sediment Storage Height	10.75"	Phase II Stormwater Products, Inc. Lab
Maximum Continuous Length	1-100/per linear ft.	Phase II Stormwater Products, Inc. Lab
Staking Requirement 2.1 Slope or greater	Maximum every 10 linear ft.	Phase II Stormwater Products, Inc. Lab
Outside Casing Organic Hessen	50% 7 Mill 50% 10 Mill	Phase II Stormwater Products, Inc. Lab
Maintenance Requirement (remove sediment)	5.5"	Phase II Stormwater Products, Inc. Lab
Functional Longevity	2-7/yr	Phase II Stormwater Products, Inc. Lab
Maximum Slope Length (<2%)	1,300'	Phase II Stormwater Products, Inc. Lab
Hydraulic Flow Through Rate	6 -12 Gpm per linear ft.	Soil Control Lab Inc.
Total Solids Removal	98%	Soil Control Lab Inc.

PART 2

M 201- 2 PERFORMACE and DESIGN SPECIFICATIONS

TABLE 1 (continued)

Performance Design Diameter	**3 - 12”**	**Testing Lab Reference**
Total Suspended Solids Removal	81%	Soil Control Lab Inc.
Turbidity Reduction	70%	Soil Control Lab Inc.
Total Phosphorus Removal	11%	Soil Control Lab Inc.
Nitrate N Removal	50.4%	Soil Control Lab Inc.
Motor Oil Removal	99%	Soil Control Lab Inc.
Iron (Fe) Removal	74%	Soil Control Lab Inc.
Zinc (Zn) Removal	25%	Soil Control Lab Inc.
Manganese (Mn) Removal	72%	Soil Control Lab Inc.

Certified Phase II Stormwater Products
Microbial *FilterMitt™* Berm

PART 2

M 202 PHYSICAL and CHEMICAL REQUIREMENTS

TABLE 2

Compost Parameters	Test Method & Name Reported As	Requirement
pH	TMECC 04.11-A Electrometric pH 1:5 Slurry Method pH Units	6.0-8.5
Soluble Salts	TMECC 04.10-A Electrical Conductivity 1:5 Slurry Method dS/m (mmhos/cm)	0–5
Moisture Content	TMECC 03.09-A Total Solids & Moisture at 70+/- 5 deg C % Wet Weight Basis	30–60 %
Organic Matter Content	TMECC 05.07-A Matter Method. Loss on Ignition Organic Matter Method % Dry Weight Basis	25-65 %
Maturity Percent Emergence %Relative Seedling Vigor %Relative to positive control	TMECC 05.05-A Biological Assays. Seedling Emergence and Relative Growth	100% 100%
Stability (respirometry)	TMECC 05.08-B Carbon Dioxide Evolution Rate mg CO_2-C/g OM per day mg CO_2-C/g TS per day	<8
Particle Size	TMECC 02.12-B Sample Sieving for Aggregate Size Classification % Dry Weight Basis	Inches & Percentage Passing 3" (75 mm) 100% 1" (25 mm) 90% to 100% ¾"(19 mm) 70% to 100% ¼"(6.4 mm) 30% to 75% Maximum particle size: 4" (100 mm) No more than 60% passing ¼" (6.4 mm) in high rainfall/flow rate situations)
Physical Contaminants (man made inert)	TMECC 02.02-C % dry weight basis	< 1
Pathogen	TMECC 07.01-B Fecal Coliform Bacteria <1000 MPN/gram dry wt.	Pass
Pathogen	TMECC 07.01-B Salmonella <3 MPN/4 grams dry wt.	Pass

PART 2

M 203 BIOLOGICAL REQUIREMENTS

TABLE 3

Property	Test Method	Requirement Low-High
Active Bacterial (mg/g)	DIC/ Epifluorescence Microscopy	Range 15-30
Total Bacterial (mg/g)	DIC/ Epifluorescence Microscopy	Range 150-300+
Active Fungal (mg/g)	DIC/ Epifluorescence Microscopy	Range 2-10
Total Fungal (mg/g)	DIC/ Epifluorescence Microscopy	Range 150-200+

These desired ranges are meant to maintain the diversity, and active populations of beneficial microorganisms.

These organisms are responsible for maintaining clean water as they metabolize polluted contaminants that reside in stormwater.

PART 3. INSTALLATION, MAINTENANCE, & POST CONSTRUCTION

M 301 MATERIAL:

A. Outside materials need to meet Certified Phase II Stormwater Products specifications in Table 1 ,100% organic hessian fabric (burlap), this fabric facilitates the growth of beneficial microorganisms, and *does not need to be removed*, as it will be thoroughly utilized as a microbial food resource and will become incorporated within the organic materials, that it encapsulates.

B. Inside media needs to meet Phase II Stormwater Products specifications in tables 1, 2, and 3.

C. Certified Phase II Stormwater Products Microbial *FilterMitt*™ Berm benefits pre-construction, construction and post-construction phases of development.

D. Certified Phase II Stormwater Products Microbial *FilterMitt*™ Berm specifications meet the highest performance criteria.

E. Certified Phase II Stormwater Products Microbial *FilterMitt*™ Berm exceeds the AASHTO, EPA, State & Federal regulations.

F. All Certified Phase II Stormwater Products Microbial *FilterMitt*™ Berm installations shall be done by a Phase II Stormwater Products Certified Professional to assure that all the specifications as described will be met and the project will succeed as it was designed.

G. By using Certified Phase II Stormwater Products Microbial *FilterMitt*™ Berm for pre- construction, construction and post construction development means that the erosion control devise can be made on site with little or no soil disturbance, or compaction, or it can be delivered in varying section lengths, pre-filled and placed into position where it is needed most. This saves on installation time and costs, as well as environmental impacts.

PART 3. INSTALLATION, MAINTENANCE, & POST CONSTRUCTION

M 302 INSTALLATION:

A. All Certified Phase II Stormwater Products Microbial *FilterMitt*™ Berm Installations shall be done by a Phase II Stormwater Products Certified Professional.

B. If installation is not done by a Certified Phase II Stormwater Products Certified Professional, than the installation of the project may not comply with the design specifications and performance standards; the project will be declined.

C. A Certified Phase II Stormwater Products Microbial *FilterMitt*™ Berm can be constructed on site or delivered prefilled: minimal onsite labor time.

D. Can be tailored to site requirements; individual units can be made in lengths from 1-100 linear feet.

E. When the Certified Phase II Stormwater Products Microbial *FilterMitt*™ Berm is properly installed, water will not be able to bypass around the ends.

F. Because the Certified Phase II Stormwater Products Microbial *FilterMitt*™ Berm conforms to the grade, there is no need to re-grade with heavy equipment which soil disturbance and creates conditions for more erosion.

G. The movement of heavy equipment compacts the soil which increases flow rate and damages soil structure making it more difficult to establish seed germination.

H. Staking with hardwood stakes at maximum 10 foot intervals ensures stability against water flow for slopes 2:1 and greater. Ends of individual Certified Phase II Stormwater Products Microbial *FilterMitt*™ Berm are overlapped and staked to ensure integrity on slopes 2:1 or greater. End stakes should be placed no more than one foot from terminal ends on slopes 2:1 or greater. See Figure 2 page 20.

I. Protective fencing is recommended to protect structures from construction disturbance, or vehicle and foot traffic. Fence should be placed in front of the Certified Phase II Stormwater Products Microbial *FilterMitt*™ Berm. See Figure 1 & 2 pages 19 and 20.

PART 3. INSTALLATION, MAINTENANCE, & POST CONSTRUCTION

M 303 MAINTENANCE

A. To ensure proper functioning, regular inspections, and if necessary, maintenance should take place after installation. Microbial *FilterMitt™* Berm should be inspected immediately by contractor or agent after each rainfall-producing event, and at least daily during prolonged rainfall events. Proper functioning and sediment accumulation should be checked during inspection. Deposited sediments should be removed by contractor, when the level of the deposition reaches approximately one half the effective height of the Microbial *FilterMitt™* Berm.

B. Beneficial microorganisms need to be applied to the Certified Phase II Stormwater device every two months during the growing season to assure that the Beneficial Microorganisms meet the desired range as described in the Certified Phase II Stormwater Products Specifications. Only when meeting these desired ranges can you be sure the Phase II Stormwater Product is remediating persistent contaminated pollutants found in the stormwater, as well as improving soil structure, and hydrological conductivity.

C. Identify and remove all invasive plants within the order of conditions footprint once per month during growing season.

D. Apply Beneficial Microorganisms to improve the vigor and vitality of either planted or existing native vegetation.

E. Remove any invasive exotic or native vegetation that may be disturbing the functioning of the stormwater filtering device.

PART 3. INSTALLATION, MAINTENANCE, & POST CONSTRUCTION

M 304 POST CONSTRUCTION:

A. Leave in place to continue filtering pollutants from storm water run-off.

B. Rake by hand, {no machine for spreading} material used as a soil amendment on existing site.

C. Certification Disclaimer:
Phase II Stormwater Products, Inc. warrants only that any product which has been certified and meets Certified Phase II Stormwater Products, Inc. "Certification Program" criteria for such certification and except as expressly set forth herein: Phase II Stormwater Products, Inc. Makes no warranty, express or implied as to any product which has not been certified under the Phase II Stormwater Products, Inc. "Certification Program", including any warranty as to merchantability or fitness for a particular purposed and Phase II Stormwater Products, Inc. hereby expressly disclaims all other warranties; Phase II Stormwater Products, Inc. shall not be liable for any loss, injury, claim, liability, or damage of any kind resulting in any way from any errors, omissions, content, information, opinions or assessments contained in the Phase II Stormwater Products, Inc. "Certification Program"; and, Phase II Stormwater Products shall not be liable, in any event for any incidental, consequential, special, exemplary or punitive damages (including without limitation for lost data, lost profits or loss of goodwill) of any kind or nature arising out of the certification of any product under the Phase II Stormwater Products, Inc. "Certification Program", whether such liability is asserted on the basis of contract, tort, or otherwise, even if Phase II Stormwater Products, Inc. has been made aware of the possibility of such loss or damage in advance.

DETAILED DRAWING
MICROBIAL FILTERMITT™ BERM
SLOPES 2 TO 1 OR LESS
FIG. 1

FILTERMITT™ BERM SECTION VIEW

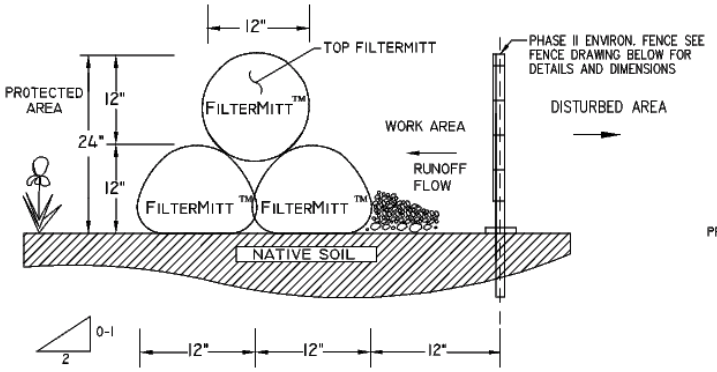

FILTERMITT™ BERM TOP VIEW

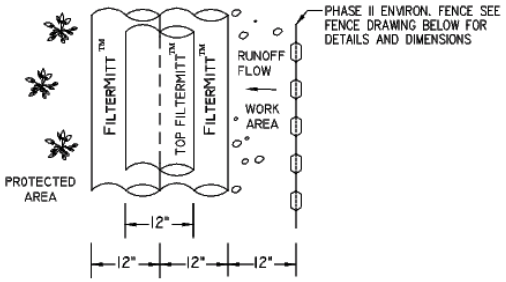

FILTERMITT™ BERM OVERLAP END VIEW

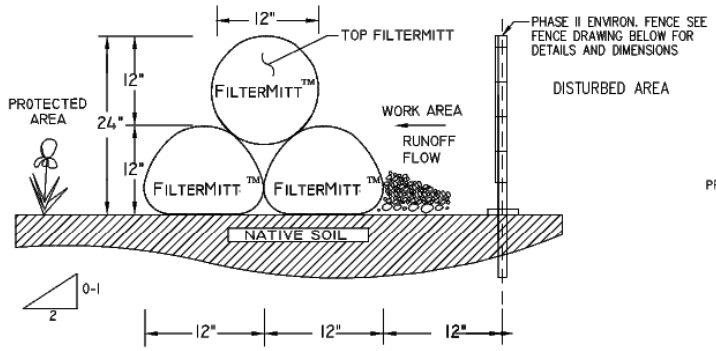

FILTERMITT™ BERM OVERLAP TOP VIEW

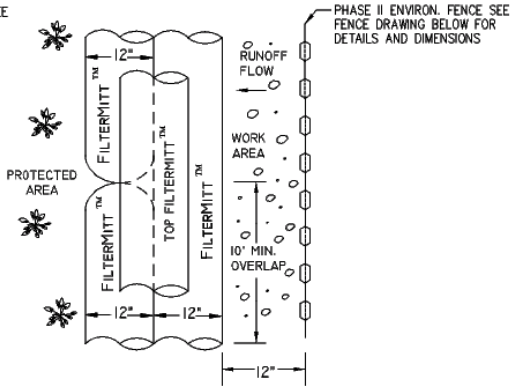

FILTERMITT™ BERM NOTES:

REFER TO PART 3 OF THE DETAILED SPECIFICATIONS FOR INSTALLATION, MAINTENANCE & POST CONSTRUCTION INSTRUCTIONS

PHASE II FENCE FRONT ELEVATION

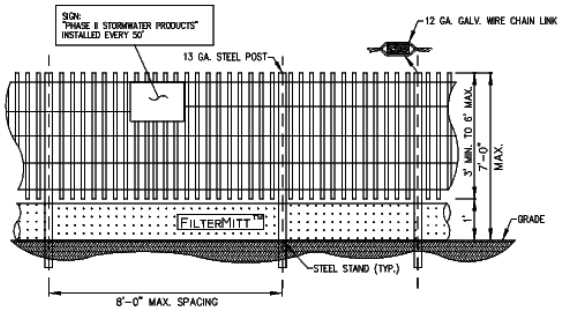

PHASE II FENCE END ELEVATION

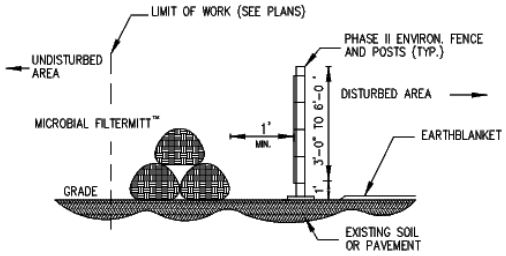

FENCE NOTES:

INSTALLATION ON THE DISTURBED AREA WITHIN 1 FT IN FRONT OF MICROBIAL FILTERMITT.

INSTALLATION OF FENCE SHALL LEAVE 1 FT ABOVE GRADE TO ALLOW ANIMALS ACCESS TO THEIR HABITAT

INSTALL SCREEN FENCE PRIOR TO MICROBIAL FILTERMITT.

FENCE TO BE MAINTAINED THROUGHOUT PROJECT UNTIL REMOVAL IS APPROVED BY A PHASE II STORMWATER PRODUCTS, INC. CERTIFIED INSTALLER.

NOT TO SCALE

FOR FURTHER INFORMATION ABOUT PHASE II STORMWATER PRODUCTS, INC. CONTACT US AT:
P.O. BOX 737 - WRENTHAM, MA 02093 - PH: (508) 384-1984 - FAX: (508) 384-0571

COPYRIGHT 2009 PHASE II STORMWATER PRODUCTS, INC. ALL RIGHTS RESERVED.

DETAILED DRAWING
MICROBIAL FILTERMITT™ BERM
SLOPES GREATER THAN 2 TO 1
FIG. 2

FILTERMITT™ BERM
SECTION VIEW

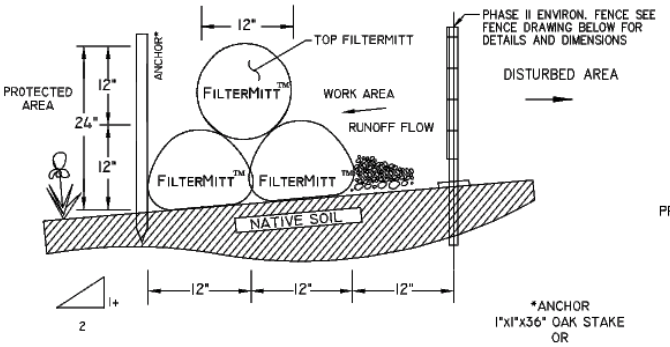

FILTERMITT™ BERM
TOP VIEW

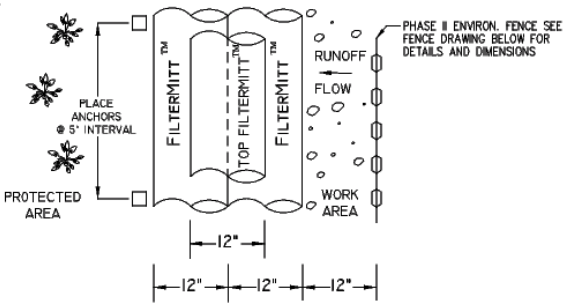

*ANCHOR
1"x1"x36" OAK STAKE
OR
2" OR GREATER TREE OR
OTHER PRE-EXISTING,
EQUIVALENTLY
ANCHORED OBJECT.

FILTERMITT™ BERM
OVERLAP END VIEW

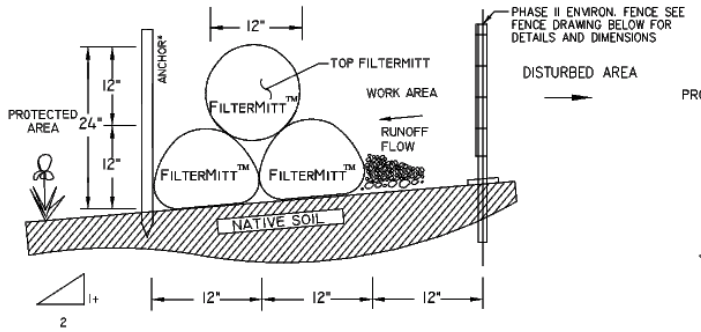

FILTERMITT™ BERM
OVERLAP TOP VIEW

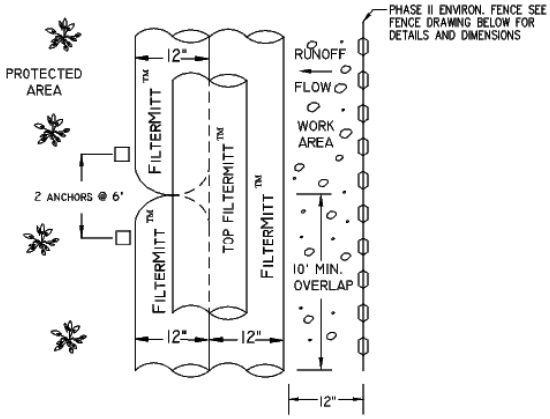

FILTERMITT™ BERM NOTES:

REFER TO PART 3 OF THE DETAILED SPECIFICATIONS FOR INSTALLATION, MAINTENANCE & POST CONSTRUCTION INSTRUCTIONS.

PHASE II FENCE
FRONT ELEVATION

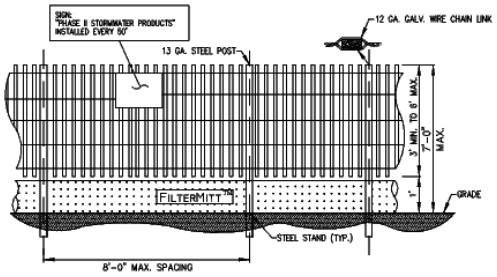

PHASE II FENCE
END ELEVATION

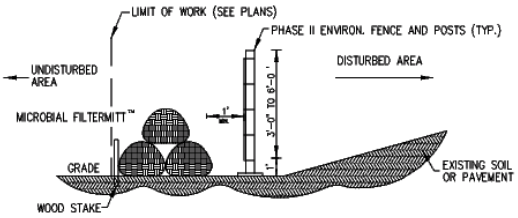

FENCE NOTES:

INSTALLATION ON THE DISTURBED AREA WITHIN 1 FT IN FRONT OF MICROBIAL FILTERMITT.

INSTALLATION OF FENCE SHALL LEAVE 1 FT ABOVE GRADE TO ALLOW ANIMALS ACCESS TO THEIR HABITAT.

INSTALL SCREEN FENCE PRIOR TO MICROBIAL FILTERMITT.

FENCE TO BE MAINTAINED THROUGHOUT PROJECT UNTIL REMOVAL IS APPROVED BY A PHASE II STORMWATER PRODUCTS, INC. CERTIFIED INSTALLER.

NOT TO SCALE

FOR FURTHER INFORMATION ABOUT PHASE II STORMWATER PRODUCTS, INC. CONTACT US AT:
P.O. BOX 737 - WRENTHAM, MA 02093 - PH: (508) 384-1984 - FAX: (508) 384-0571

COPYRIGHT 2009 PHASE II STORMWATER PRODUCTS, INC. ALL RIGHTS RESERVED.

CONTECH®
ENGINEERED SOLUTIONS

Engineered Hard Armor Solutions

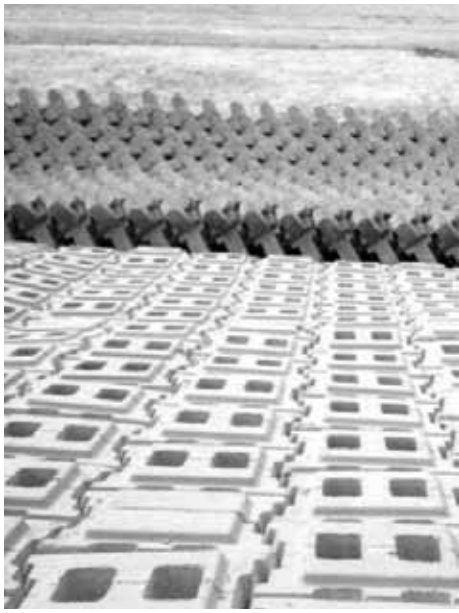

ARMORTEC®
Erosion Control Solutions

Channel Lining | Shoreline Protection | Dam & Spillway Protection | Levee Stabilization | Bridge Scour

ArmorFlex: Articulating Concrete Block Mats

The industry leader since 1978, ArmorFlex® articulating concrete block (ACB) mats make a flexible matrix of concrete blocks with uniform size, shape and weight used for hard armor erosion control. ArmorFlex blocks have specific hydraulic capacities and are laced longitudinally with galvanized steel, stainless steel or polyester revetment cables which provide ease of handling and installation. Smaller classes of ArmorFlex may be hand-placed.

Applications

- Channel lining
- Shoreline protection
- Boat ramps & access roads
- Dam overtopping protection
- Pipeline & cable protection
- Bridge abutment protection
- Retention basins
- Levee stabilization
- Bridge scour protection

ArmorFlex has proven to be an aesthetic and functional alternative to dumped stone riprap, gabions, structural concrete and other hard armor erosion protection systems. ArmorFlex is easy to install and has a low life-cycle cost when compared to other permanent solutions. These two benefits can drastically reduce the cost to install and maintain the system. ArmorFlex mats are installed on a prepared subgrade utilizing conventional construction equipment and site-specific filter fabric. While both block types provide protection and stability, only the open-cell specifically offers the void space necessary for revegetation.

Research Proven Performance

Armortec has carried out extensive research into wave and open channel flow conditions on ArmorFlex in the United States and the Netherlands. Design manuals and computer programs are available to assist in the proper ArmorFlex block selection for your hydraulic conditions.

Open-Cell Block

Closed-Cell Block

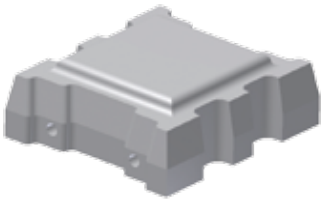

Side View

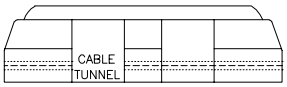

End View

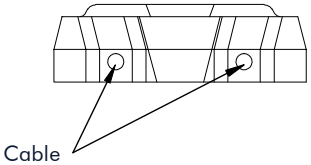

Tapered Series

Armortec's unique Tapered Series ArmorFlex block design offers superior protection for embankment dams, spillways, high velocity channels and down chutes. The essential design component of ArmorFlex Tapered series is the 0.5 inch taper that virtually eliminates destabilizing impact flow forces, thereby providing a high factor of safety. The ArmorFlex Tapered block system has been successfully tested under hydraulic jump conditions at Colorado State University. Each Tapered series design incorporates a rock drainage layer beneath the system.

Tapered-Cell Block

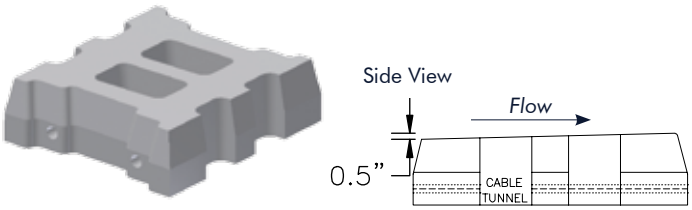

Block and A Half

The latest innovation in ACB technology is the ArmorFlex Block and a Half®. This new product introduction increases the factor of safety for the overall system while maintaining the ease of installation and overall benefits of the typical ArmorFlex systems.

Block and A Half Block

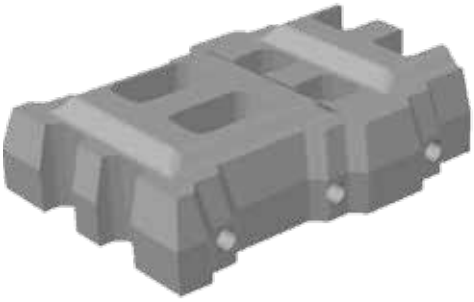

ArmorFlex: Installation

The proper installation of ArmorFlex ACB mats is important to achieving the intended hydraulic performance and maintaining stability against the erosive forces of flowing water. An ACB revetment system consists of a suitably prepared and compacted subgrade, a suitable site-specific filter fabric and properly sized ACB mattresses placed in "intimate contact" with the filter fabric and subgrade. Each individual site will vary, so it is important to follow the engineering project drawings as designed and sealed by a registered Professional Engineer; particularly as they relate to standard termination details. Please refer to the Armortec® Installation Guide for further instructions on proper material handling.

Spreader Bar Rigging Detail

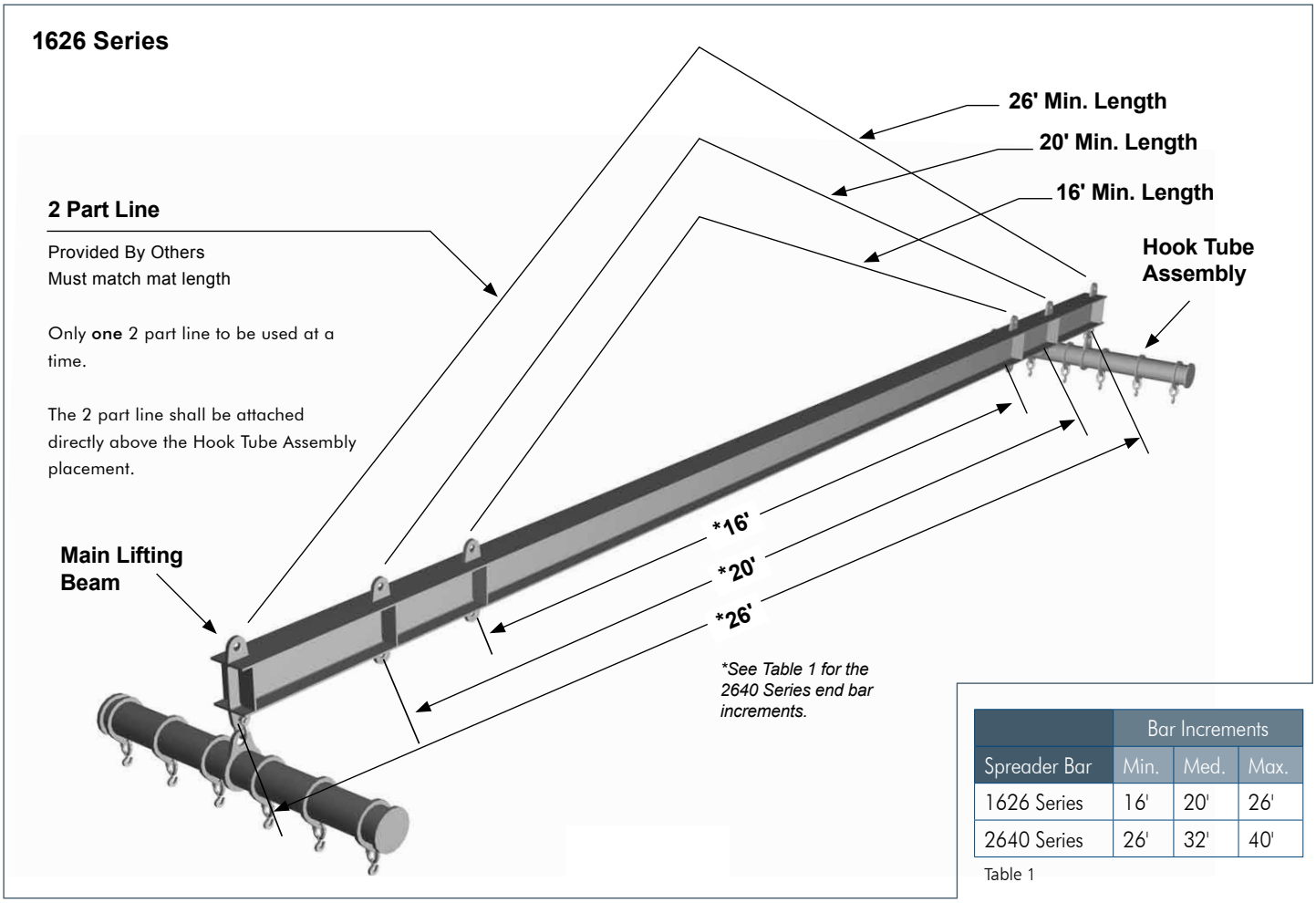

	Bar Increments		
Spreader Bar	Min.	Med.	Max.
1626 Series	16'	20'	26'
2640 Series	26'	32'	40'

Table 1

ArmorFlex: Installation

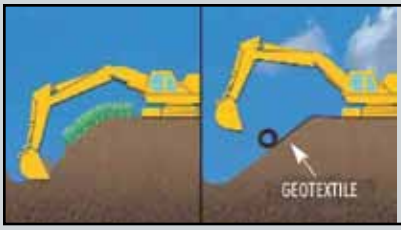

Step 1:
ArmorFlex arrives on-site as a system of factory-assembled mats. ArmorFlex is placed on a site specific geotextile which has been placed on a prepared subgrade using conventional construction equipment.

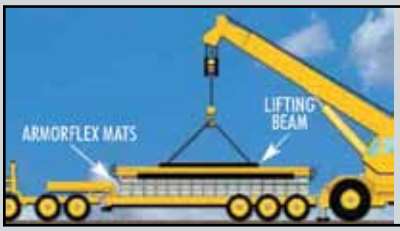

Step 2:
Mats are supplied on flat bed trailers. Mats can be handled with a spreader bar which can be rented from CONTECH.

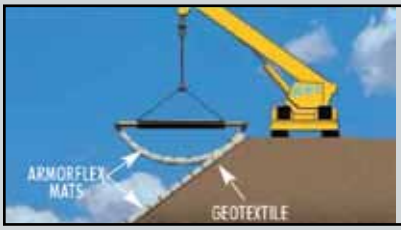

Step 3:
Above normal waterline mats may be topsoiled and seeded to give a vegetated effect.

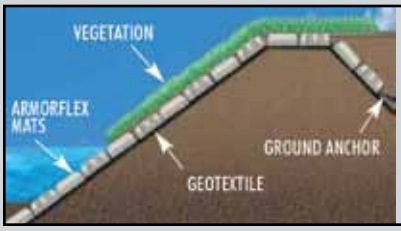

Step 4:
Proper toe trench requires a minimum of two rows of block buried below predicated soil depth. Tapered series block or mats subject to wave attack are required to have a bedding layer of crushed stone or gravel.

See Armortec Installation Guide for complete information on how to properly install ArmorFlex.

ArmorRoad

ArmorRoad® was developed in the field with input from contractors, construction managers and owners. The result is a flexible product that is efficient to install, aesthetically pleasing and able to withstand heavy traffic loads in harsh environments. ArmorRoad does not require the sand backfill typically required of standard pavers due to its unmatched durability with 8,000 PSI and 6" thickness. In addition, should a problem occur in the subgrade, ArmorRoad can be removed quickly and reinstalled.

Applications

- Durable driving surface
- Temporary road application
- Heaving and expanding subgrade condition

ArmorRoad Block

Hard Armor Guidelines are available through the Contech website at www.ContechES.com

ArmorWedge

ArmorWedge® is a concrete step overlay protection system for embankment dams and spillways that are subject to high forces associated with overtopping flow. Researchers at Colorado State University assessed the stability of the blocks by comparing the downward (positive) forces of the block weight and the pressure of the flowing water to the uplift (negative) forces. The ArmorWedge system was tested up to and including the facility discharge capacity of 40 cf/s/ft. This discharge capacity had associated water velocities of 35 ft/sec and a shear stress of 22 lbs/sqft. Even at these levels the ArmorWedge system remained stable. An effective drainage system - allowing water to be removed from beneath the system - is essential to the design of the overlay.

The practicality of ArmorWedge lies in the cost effective ease of installation. This is particularly true for projects where the use of large machinery is deemed impractical due to confined, hard to reach jobsites or environmental impact on the surrounding area. ArmorWedge is typically installed by hand over site-specific filter fabric and subsequent drainage medium on a well compacted surface.

Applications

- Dam overtopping
- High velocity channels
- Primary and secondary spillways

ArmorWedge Block

ArmorLoc

ArmorLoc® concrete interlocking blocks are specifically designed to control erosion. The ArmorLoc system provides easy and economical installation when equipment is not feasible or cannot be used due to confined or hard to reach areas. ArmorLoc is installed manually over site-specific filter fabric on a prepared surface. It improves the landscape and promotes drainage from the smallest erosion control job to the largest commercial project.

ArmorLoc is available in three sizes and weight classifications and is also available in a closed-cell option. The unique interlocking design of ArmorLoc keys each block into four adjacent blocks to hold it firmly in position and resist lateral movement.

Applications

- Retention basins
- Shoreline protection
- Drainage ditch lining
- Outfall protection
- Bridge abutment protection

ArmorLoc Block

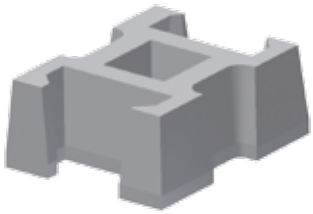

A-Jacks: Concrete Armor Units

A-Jacks® are high stability concrete armor units designed to interlock into a flexible, highly permeable matrix. A-Jacks can be installed either randomly or in a uniform pattern. The voids formed within the A-Jacks matrix provide approximately 40% open space in the uniform placement pattern. These voids provide habitat for fish and other marine life when applied as a reef, revetment or as a soil support system in river applications.

A-Jacks Unit

Applications

- Drop structures
- Weirs
- Energy dissipation
- Bridge scour protection
- Streambank/toe stabilization

Streambank Applications

Streambank erosion often produces steep banks with little or no vegetation. These unprotected banks are even more susceptible to erosion due to over steepening, loss of ground cover, groundwater discharge and stream erosion at the base of the bank. A-Jacks concrete armor units provide an alternative which when used with bio stabilization technique, develops a cost-effective solution. In addition, the voids may be backfilled with suitable soils and planted with a variety of vegetation including grasses, shrubs and trees above the normal base flow.

Bridge Scour Applications

The ability of the A-Jacks system to dissipate energy and resist the erosive forces of flowing water allows this system to protect channel boundaries from scour and erosion. Extensive laboratory research was performed on both model and full scale units in order to evaluate the hydraulic properties of the A-Jacks units. A-Jacks are included in Hydraulic Engineering Circular 23 (HEC-23) as an effective scour protection product. An A-Jacks Design Manual for the hydraulic design of open-channel conveyance ways and pier scour countermeasure is available upon request.

Energy Dissipation

A-Jacks' ability to dissipate energy in channel, spillway or culvert outfall applications relies on the inherent roughness of the units. For A-Jacks, the design value for Manning's roughness coefficient is n=0.1. This value was determined from extensive full and quarter scale laboratory testing. The ability of A-Jacks to increase roughness creates a hydraulic jump when flow encounters the units. Creating the hydraulic jump effectively releases the energy associated with high velocity and/or steep embankment flow conditions. By releasing the energy, the erosive forces associated with the hydraulic jump are also greatly diminished. As the flow travels downstream through the A-Jacks matrix, the energy grade line slope continues to be reduced until the desired flow conditions are obtained downstream of the A-Jacks units.

Hard Armor Guidelines are available through the Contech website at www.ContechES.com

Contech Engineered Solutions provides site solutions for the civil engineering industry. Contech's portfolio includes bridges, drainage, retaining walls, sanitary sewer, stormwater, erosion control, soil stabilization and wastewater treatment products.

Visit our web site: www.ContechES.com

800-338-1122

NOTHING IN THIS CATALOG SHOULD BE CONSTRUED AS AN EXPRESSED WARRANTY OR AN IMPLIED WARRANTY OF MERCHANTABILITY OR FITNESS FOR ANY PARTICULAR PURPOSE. SEE THE CONTECH STANDARD CONDITIONS OF SALE (VIEWABLE AT WWW.CONTECHES.COM/COS) FOR MORE INFORMATION.

CONTECH® ENGINEERED SOLUTIONS

©2015 Contech Engineered Solutions LLC
All rights reserved. Printed in USA.

Armortec Bro 1/15 PDF MC RECYCLED PAPER

NEW YORK STATE
DEPARTMENT OF
ENVIRONMENTAL CONSERVATION

Shoreline Stabilization Techniques

Printable Version of this web page (PDF) (1.6 mB)

The shoreline is a valuable and important area. It provides a rich, active habitat for fish and wildlife, and cleans stormwater runoff before it enters the water. The shoreline provides structural integrity to the water's edge, protecting it from erosion. The shoreline also gives us a relaxing place to fish, boat and contemplate nature.

Shoreline erosion is a natural process that occurs on lakes, streams, rivers and along the coast. It is the gradual, although sometimes rapid, removal of sediments from the shoreline. It is caused by a number of factors including storms, wave action, rain, ice, winds, runoff, and loss of trees and other vegetation. Although erosion is not intrinsically harmful, when it is augmented to the point where it affects natural resources, water quality, ecosystems, and property loss, it is generally undesirable.

Some commonly practiced shoreline modifications and erosion control methods can actually increase the rate of erosion as well, resulting in costly structural damage as well as property loss. Others may aid in the destruction of the shoreline's natural environment. This guide addresses the problems with some of these common practices and offers alternative methods. The Department encourages the use of "soft" or natural shoreline protection methods over "hard" or structural methods. These methods are much easier on the environment; imitate natural systems, can interact naturally within the ecosystem, as well as save you a significant amount of money. We have included advice and information for various shoreline stabilization methods. Please be aware that permits are necessary for the installation of most of these methods.

Some Basic Principles of Shoreline Protection

To best preserve the shoreline environment, stabilization methods should follow these basic principles:

- Imitate nature
  The native vegetation usually found at the shoreline strengthens its structural integrity and prevents the land from breaking apart. The deep roots of these plants bind the earth together while their foliage and branches protect from the erosion caused by rainfall and winds. Removing these plants can cause the shore to weaken and easily crumble into the water.
- Keep slopes gentle
  The gradual slope of a natural shoreline absorbs the energy of waves. A steep, eroded slope or retaining wall allows waves to crash into the shore, drastically increasing erosion and causing that wave energy to cause damage on adjacent shorelines.
- Employ "soft armoring" whenever possible.
  By "soft armoring" we refer to live plants, logs, root wads, vegetative mats, and other methods that eliminate or reduce the need for "hard armoring", such as rock rip-rap, stone blocks, sheet-pile or other hard materials. Soft armor is alive and so can adapt to changes in its environment

as well as reproduce and multiply. It also provides habitat for fish and wildlife. Vegetation can be kept trimmed so as not to block the view - after all, that's why many of us choose to live near the water!

- Mix it up
  Regardless of the type of natural shoreline encountered, you will undoubtedly see a wide diversity of materials: live trees, dead branches, stumps, rocks of many shapes and sizes, silt, sand, cattails, grasses, flowering plants, etc. By imitating this variety, you can maintain or reproduce the natural value of the shoreline and have an effective, resilient, and eye-pleasing shoreline. Working with these natural and locally available materials can also dramatically cut project costs. In the end, a mix of techniques may yield the best project, uniquely fit for your situation. If your area is already developed, it is a good idea to look to nearby undeveloped shoreline areas for examples of a more natural state.
- Keep it small and simple.
  In some instances, only a portion of your shoreline area may be eroding. If this is the case, a small or mixed rip-rap and vegetation project may suffice. Keep in mind that healthy trees are often the cornerstones of a stable shoreline.

How Can a Natural Shoreline Protect against Erosion?

In its natural state, the shoreline area is perfectly engineered to protect against erosion.

Take the example below:

The native vegetation usually found in the shoreline area strengthens its structural integrity and prevents the land from breaking apart. The deep roots of these plants bind the earth together, while their foliage and branches reduce erosion caused by rainfall and winds. Clearing these plants causes the shore to weaken and easily crumble into the water.

The gradual slope of the natural shoreline area has developed to absorb the energy of waves. A steep, eroded slope or retaining wall allows waves to crash into the shore, drastically increasing erosion.

This is the same shoreline, after a considerable amount of erosion:

Although this may not exactly reflect your shoreline, this picture represents the general effects of erosion.

How Does the Shoreline Area Provide a Habitat for Fish and Wildlife?

A Natural Shoreline Area:

- Fish and frogs often spawn in the silt at the bottom of the shore and littoral zone. The littoral zone lies just past shoreline area towards the water.
- Vegetation provides nesting spots for birds and food for insects, waterfowl and aquatic mammals.
- Fallen logs and branches provide shelter and hunting areas for fish and mammals, while turtles use them to sunbathe.
- A shoreline's natural vegetation acts as a filter, preventing sediment and unnecessary nutrients from entering the waterbody. This runoff leads to poor water quality and upsets the balance needed for a healthy shoreline habitat. In the case of lawns, this runoff can include fertilizers, pesticides, lawn clippings and pet waste. Geese are attracted to lawns, and their waste can add to this runoff.
- Turtles and amphibians have free access to land, while retaining walls (seen below) block this access, preventing mating and spawning.

This is the very same shoreline, after landowner had installed a retaining wall:

The effects are clearly seen, as the lush ecosystem is quickly destroyed.

Harmful Shoreline Alterations

The following types of alterations and shoreline protection lead to increased erosion, structural damage and the destruction of the shoreline ecosystem:

Bulkheads and Retaining Walls

Normally a natural, gradual slope will absorb the energy of the wave. Bulkheads and retaining walls cause waves to crash into the shore. Much of the energy of these waves is sent downwards into the water at the base of the wall. The dirt or "substrate" is slowly dug out from under the wall's foundation, eventually causing it to lean and then tumble into the water. Additionally, water draining from upland builds up behind the wall, pushing the wall from behind, especially during freeze-thaw cycles. Construction of a bulkhead or retaining wall can also increase the erosion rates on neighboring properties.

From an environmental standpoint, retaining walls are by far the most destructive method of stabilization. With retaining walls, the vegetated area that would normally provide shelter, places to feed, breeding and nesting areas is cleared and built over, quickly and completely destroying the ecosystem.

The effect of a bulkhead on adjacent un-bulkheaded property
Courtesy of US Fish and Wildlife Service

Not only are retaining walls the most expensive and environmentally harmful option, but when it eventually collapses you'll be left with a staggering repair bill. This is especially troublesome in cases where structures such as houses, garages, etc. are built close to the wall. If the wall fails, you may find the accompanying structure going down with it. No matter how extensive, the collapse of a retaining wall is inevitable.

A retaining wall failure

A very extensive but failed retaining wall

If you already have a retaining wall installed, you may want to completely remove the wall and rework the area using one of our recommended methods. However, in some locations, you may not be able to utilize one of these options. If this is the case, the Department may recommend that you build the wall further back (landward) from the existing wall, rather than building a new wall further out into the water.

Permanent Docks

Docks can interrupt the flow of sediment along the shore and cause unnatural buildups, affecting the rate of erosion. They can also block the sunlight needed for healthy vegetation. For these and other reasons, it is best to minimize the size and number of docks. Temporary and seasonal docks are an optimal tradeoff, requiring a small amount of labor for seasonal installation.

Artificial Sand Beaches

It is important to retain the natural substrate composition. Many people either dump sand to create a beach area, or clear the natural vegetation. Sand beaches are vulnerable to erosion and kill the vegetation underneath. The sand is easily washed away by receding wave action. If a sandy surface is desired, it should be placed well away from the zone affected by wave action, with a wide vegetated buffer strip. Removing the native vegetation, and too many fallen logs and branches both increases the rate of erosion and harms the waterbody's ecosystem. The roots from the vegetation hold the shore together and provide food and shelter for aquatic mammals, birds, turtles and insects.

Lawns and Lawn Chemicals

Manicured lawns are devoid of the vegetation that normally prevents a shoreline from eroding. The grass used for these lawns lacks a deep root system, which is essential to

A manicured lawn eroded by wave action

a stable shoreline. A combination of waves and weather will begin to eat away at the lawn, causing it to break apart and crumble into the water.

Lawn chemicals, such as fertilizers and herbicides, can enter a waterbody and affect its chemical balance, contributing to unsightly and unhealthy algal blooms or in severe cases, fish kills.

To prevent these problems: Either replace the lawn with native vegetation or maintain a "buffer zone" to separate the lawn from the water.

How to Create a Buffer Zone:

A buffer zone is a strip of vegetation at the water's edge. The wider the buffer zone the better, but a buffer extending at least 50 feet back should be enough, although for cold water lakes, at least 100 feet will be necessary. Of course, even the smallest buffer is better than nothing. The simplest way to create a buffer zone is to stop mowing a strip of your lawn at the water's edge. Native vegetation should then begin to return in this area. You may choose to plant certain types of plants for either their look, or their effectiveness in stabilizing the shore. Supplement grass with deeply rooted woody vegetation. Since native species vary in different areas across the state, we recommend that you check with your local Soil and Water Conservation Service for suggestions.

Walkways or Roads

When a walkway or road is built alongside the shore, stormwater runoff will drastically increase, significantly contributing to erosion. Normally, the ground absorbs rainwater. As with lawns, any walkways or roads should be properly buffered from the water as described above.

Recommended Shoreline Protection Methods

We recommend using "softer" approaches for your shoreline protection. These methods can be more cost efficient (having lower maintenance costs), more durable and resilient, aesthetically pleasing, and environmentally friendly to the commonly used "hard" or structural methods. Some landowners also prefer these methods because they help the shoreline blend in with its natural surroundings.

Courtesy of Claire Prine, DEC Region 8

It is common for contractor to recommend installing a concrete retaining wall. Although it may seem like a practical solution, we highly recommend that you consider one of our recommended methods. Retaining walls are not only the most expensive option, but have a tendency to collapse, requiring extensive repairs. They also have a negative impact on the environment.

Re-Vegetation

Where it works: Re-vegetation works in the case of lawns or bare shorelines with low to moderate erosion. This is not for shorelines with extensive damage or strong wave action.

Basic idea: This method involves re-planting native vegetation that will naturally stabilize the shoreline. The deep roots of these plants bind the earth below tightly, effectively protecting your shoreline from erosion.

Cost: Low
Difficulty: Easy, can be done by landowner

With bare shorelines:
In cases where the shoreline is bare, you will have to plant the vegetation yourself. Plant in late fall or early spring for a greater success rate. This will absorb initial wave action.

Live Staking

Where it works: Slopes with light erosion; can be used in conjunction with other methods for areas with heavier erosion.
Basic idea: Take cuttings of woody plants (live stakes) like willow and dogwood and drive them into the dirt or substrate of the eroded area. They will sprout roots and grow. Typically this is best to do in early spring or late winter.

Cost: Low

Difficulty: Easy, can be done by landowner

Courtesy of USDA - Robbin B. Sotir & Associates

1. Collect and prepare stakes
Stakes must be cut (1 foot or more in length) with shears from dormant, mature stems and must be used within 8-10 days. Trim the side branches without damaging the bark, and cut the bottom of the stake at an angle.

2. Drive stakes
Using a dead blow hammer, drive the willow or dogwood stakes gently into the ground forming a right angle to the slope (see diagram). If the soil is too packed, pre-form the hole with a steel rod. The stakes should be snugly planted, with about 70% buried and 30% exposed. Place the stakes in a triangular pattern at about 2 to 3 feet apart, with a maximum of 4 stakes per yard. Geotextile fabric or jute mesh is optional but may be needed to hold off further erosion until the live stakes begin to grow. Simply cut and lay the fabric over the area prior to driving any stakes. Anchor the fabric by burying the end in the substrate, behind the live stakes. Rip Rap at the toe is optional.

Contour Wattling (Live Fascines)

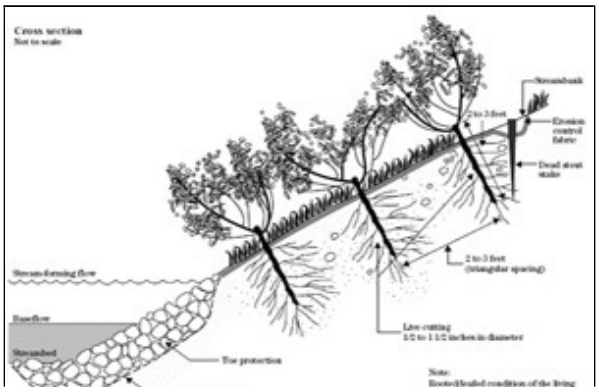

Where it works: Slopes with light erosion

Basic idea: Lay live bundles of stems and branches in trenches on the shoreline, and cover them with soil. They are held in place with both wooden and live stakes. They will sprout roots and grow.

Cost: Low

Difficulty: Easy to moderate depending on level of site prep needed.

Courtesy of USDA - NRCS EFH Chapter-16

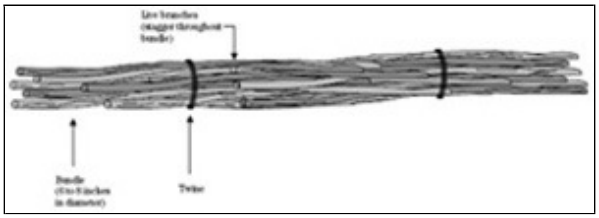

Courtesy of USDA - NRCS EFH Chapter-16

1. Collect and prepare bundles

The bundles are made of fresh plant cuttings. They should be straight, 6 to 8 inches in diameter and 5 to 30 feet in length depending on the site conditions. Plant cuttings should range in age, size and species with the growing tips facing the same direction. Willows and dogwoods work particularly well for this application. You do not need to trim the side branches of the cuttings. When tied together, the bundles should be 6 to 8 inches in diameter. You can use hemp or manila binder twine or other degradable fabric to bind the bundles, spacing the ties about a foot apart.

Courtesy of USDA - Robbin B. Sotir & Associates

2. Dig trenches and lay bundles

Dig trenches starting at the base of the slope, and continuing up the shoreline, spacing them about 3 feet apart. The trenches should match the width of your bundles and their depth should be about half the diameter of the bundle, ie, 3-4 inches. Lay your bundles in the trenches.

3. Secure bundles

Secure the bundles into place by driving 2 to 3 foot long wooden stakes through the bundle and into the soil below. Space the stakes 2 to 3 feet apart and make sure there are at least 2 to 3 inches of the stake sticking out of the top of the bundle. Then cover the bundles with soil, but leave a small portion of the top of the bundle exposed. Some large live black willow stakes can be placed along with the dead stakes to secure the bundle, helping to re-vegetate the slope.

Courtesy of USDA - Robbin B. Sotir & Associates

4. (Optional) Lay straw, mulch or fabric

On flatter slopes, lay straw or mulch between the bundles. On steeper slopes, lay a jute or coir (coconut fiber) fabric. The fabric should run under the bundles, with the bundles staked into the fabric. Fabric would need to be installed prior to step 3.

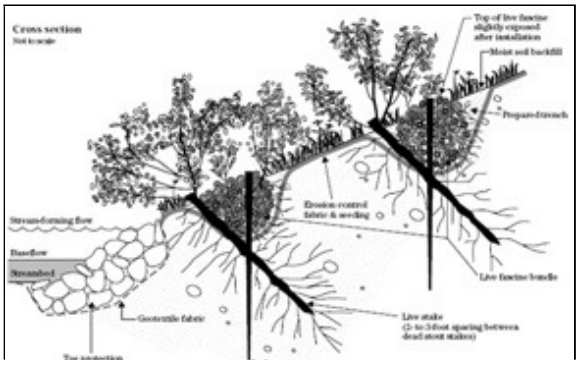

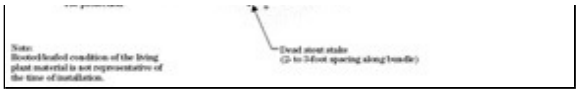

Courtesy of USDA - NRCS EFH Chapter-16

Brush Layering

Where it works: On badly eroded slopes

Basic idea: Holes are dug into the side of the slope, and plant cuttings are inserted at an angle, and grow outward, while the roots grow into the slope.

Cost: Low

Difficulty: Moderate

1. Cut Branches
Cut fresh, dormant branches (up to 12 feet long and 1/4 to an 1 inch in diameter) from your chosen species, preferably willow or dogwood. Trim off the side branches.

2. Dig the first bench
Dig out the first bench towards the bottom of the slope. The bench should be dug into the slope, about 10 to 25 degrees off horizontal (see diagram)

3. Place the cuttings
There should be several layers of cuttings on each bench, each layer being about an inch thick. Lay the first layer with the bottom ends touching the back of the excavated area and the tips pointing up out of the slope. The cuttings should be crisscrossed. Cover this layer with dirt and start the next. Repeat this process until the desired amount of layers is reached. Then dig the next bench and repeat steps 1-3.

4. Lay mulch or straw
Lay mulch or straw on the exposed soil between the benches.

Brush Matting

Where it works: On badly eroded slopes

Basic idea: This involves creating a "brush mattress" out of live plant cuttings, which lies on the eroded area. It will take root and grow.

Cost: Low

Difficulty: Moderate

1. Choose the plant
Brush mattresses are made of any woody plant that will sprout roots from its stem. Mostly people use the willow, but some species of dogwood and viburnum will work as well. The plants should be 2 to 3 years old, flexible, and about 5 to 10 feet long. The diameter of the branches should be ½ to 1½ inches.

2. Prepare the slope
The slope you will lay the mattress on must be flat to make sure every part of the mattress is in contact with the soil. The area should be about 5 to 18 feet in length. Make sure the soil is loose enough for the mattress to take root.

3. Dig a trench
Dig a trench along the length of the toe of the slope, where your brush mattress will end. The end of the mattress will be tucked in here. OPTIONAL but recommended: Create a live fascine (see "Contour Wattling" section above) and lay it in the trench.

4. Drive the stakes
It is recommended that you use a combination of live and dead stakes. The stakes should be 2 to 4 inches thick and 24 to 36 inches long. Drive them into the slope in rows, spaced 18 inches apart, running from the bottom to the top of the slope (see diagram). If you chose to include a live fascine, the stakes at the bottom of the rows should be staked right through the fascine.

5. Lay the branches
Now lay your branches between the rows of stakes, creating a layer 2 to 4 inches thick.

6. Tie them down
Choose either wire or twine. If using wire, use 16 gauge. With twine, use machine bristle coir that's about 1/5 to ½ inch thick with a breaking strength of 70 to 100 pounds. The wire or twine runs diagonally across the stakes (see diagram) and is tied to each stake in a clove hitch. Rip Rap at the toe is optional.

Brushmattress during installation
(Robbin B. Sotir & Associates photo)

Courtesy of USDA

An installed brushmattress system
(Robbin B. Sotir & Associates photo)

Courtesy of USDA

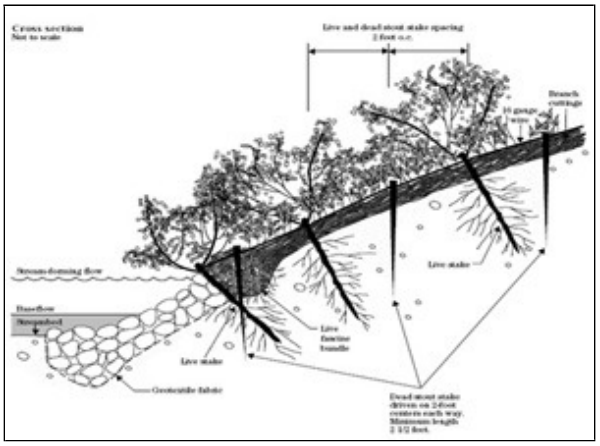

Courtesy of USDA - NRCS EFH Chapter-16

Erosion Control Matting

Basic idea: A sheet of special three-dimensional biodegradable erosion-control geotextile fabric is laid down over the exposed slope of the shoreline. Grass seeds are planted throughout the matting and then covered with soil. The grass becomes intertwined with the mat or blanket and stabilizes the shore.

Where it works: Moderate slopes up to 1 vertical to 2 horizontal along roadways or on slopes along waterways.

Cost: Low to moderate depending on area to be covered and site-preparation necessary.

Difficulty: Moderate to difficult, depending on slope preparation necessary and site characteristics.

1. Prepare the slope
Remove all soil clumps and rocks. The prepared area must exactly match the dimensions of project. Optional - Spread seeds under the area you will be laying the mat.

2. The erosion-control blankets come in rolls. Lay the blankets
Each blanket is usually 3 to 4 feet wide. Starting at the top, roll each blanket down the slope. Each blanket should overlap the next by about 3 to 4 inches.

3. Staple the blanket down
Drive special soil staples down the center of each blanket, spaced about 3 to 5 feet apart.

4. Spread soil over the blanket
Thoroughly spread a layer of about 1/2 to 3/4 inches of soil into the mat, this helps the seeds take root.

5. Spread the seeds
Spread the seeds over the mat. Spreading seeds under the mat is another recommended option. Do this prior to laying the mat.

Shoreline Protections Methods Recommended under Certain Conditions

The following methods involve hard armoring, and should only be used if the methods above will not work on your property. The softer methods above are preferred by the Department as they are superior in preventing erosion and maintaining a healthy shoreline environment. If a hard armoring method is indeed required, the sloped rip-rap or rip-rap vegetation combination provide superior protection of the shoreline than vertical cement or block walls and still provide some habitat for wildlife. All these methods will require a permit from the Department.

Courtesy of USDA - NRCS EFH Chapter-16

Stone Rip-Rap

Where it works: Shorelines where underlying soil is stable.

Basic idea: A layer of stones is laid along a slope face or bank and prevents erosion caused by wave action.

Cost: Moderate to high

Difficulty: Moderate

1. Prepare the Slope
Vegetative stabilization methods are preferred on flatter slopes and that the use of stone rip-rap should generally be limited to slopes greater than one vertical to three horizontal, where vegetative stabilization methods are not as effective. The slope must be graded to a maximum of no more than a one foot vertical rise for every 1.5 feet of horizontal distance. (Some DEC regions require a 1:2 slope depending on site conditions.) The soil must be stable. If you need to fill the area, use a fill with stones smaller than 6 inches. Make sure the slope is tightly compacted before placing the Rip-Rap.

2. Lay the rip-rap
Rip rap is hard quarry-cut stone such as limestone or granite chunks, typically 12-18" in length, having at least two fractured faces. These rocks lock in place against each other. Refrain from using rounded field stones because they will slide down the slope. There should be two layers. The first layer is called the "filter layer" The stones should be no larger than 3 inches in diameter. If you choose to use a filter fabric, place this underneath the filter layer. The top layer or the "armor layer" and takes the initial impact from the waves. If area is large enough, you may have to use a crane or a dump truck to dump the rocks. If the project is small enough you may be able to do this manually.

Note: If there are live trees or other significant native vegetation on the eroded slope, we highly recommend that these be left in place and the rip rap be laid around them taking care not to damage the bark or vegetation.

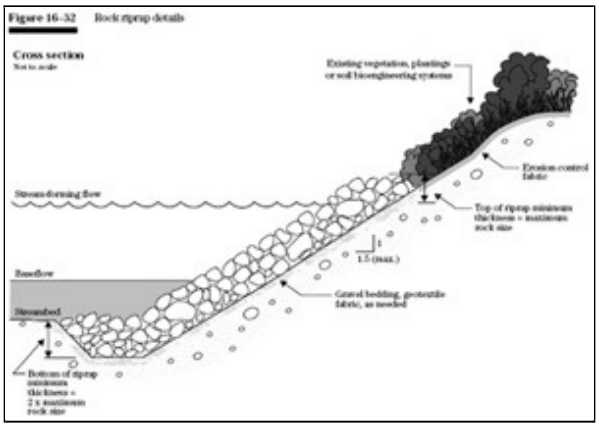

Courtesy of USDA - NRCS EFH Chapter-16

Vegetated Rip-Rap (Joint-Planting System)

Where it works: Waterways or inland lakes where underlying soil is stable.

Basic idea: This is a combination of live stalking and rip-rap. The rip-rap prevents wave action from eroding the shore while the roots of the plants bind the earth below. The plants cover the rocks, providing shade for fish and wildlife and eventually making for a very nice spot to fish. Some landowners also prefer the look of a more natural shoreline.

Cost: Moderate to High. Much cheaper if rip-rap is already in place.

Difficulty: High

1. Prepare the slope
The slope should be 2 to 1 (Horizontal to Vertical). Cover the area with a filter fabric or jute mesh. Spread the rocks over the fabric, making sure not to damage it.

2. Prepare the live stakes
Stakes must be cut long enough to be able to drive into the dirt below the rocks with the growing tips protruding above the rocks. Cut with shears from dormant, mature stems and must be used within 8-10 days. Trim the side branches without damaging the bark, and cut the bottom of the stake at an angle.

3. Insert the live stakes
They should be inserted perpendicular to the slope. The growing tips should face upward, protruding through and above the rocks. You can use a steel rod (re-bar) to puncture through the fabric and create a hole in the soil below. Use a dead blow hammer to drive the stakes into the soil. There should be two to four stakes per square yard.

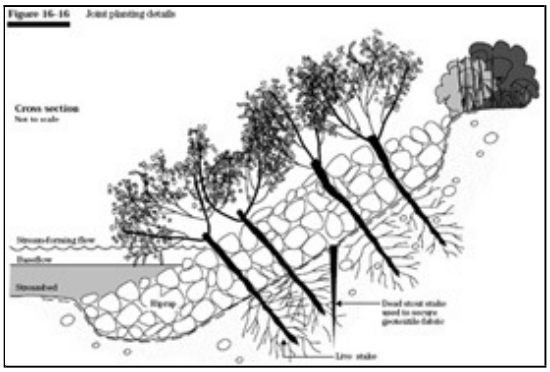

NRCS EFH Chapter-16

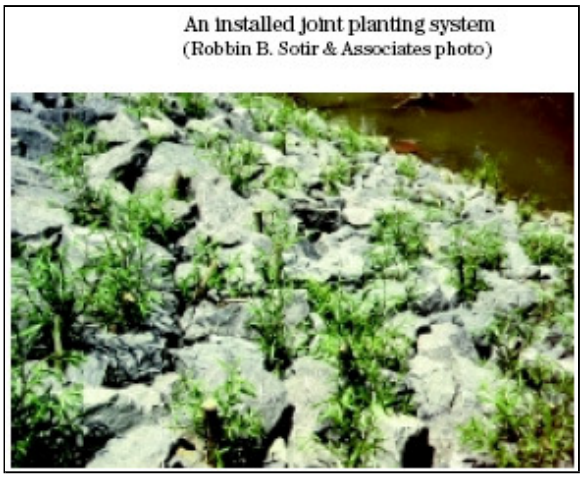

Courtesy of USDA

Vegetated Gabion Mattress

Basic idea: A gabion mattress is an elongated, mattress shaped cage filled with rocks. Vegetated gabion mattresses involved branches or cuttings inserted through rocks in the cage.

Where it works: Moderate slopes to resist wave action, ice and surface erosion.

Cost: High

Difficulty: High. We recommend that you do not attempt this yourself. A professional contractor, heavy equipment and engineer are required.

Vegetated Cribbing (Live Cribbing)

Basic idea: Interlocking planks of wood act as a sort of live retaining wall, but with less of an environmental impact. Vegetation is planted between the planks. This does not work well on high banks with heavy wave action.

Where it works: Unvegetated slopes with a lot of backfill and little wave action

Cost: Moderate to high

Difficulty: Moderate. We recommend that you do not attempt this yourself. A professional contractor, heavy equipment and engineer are required.

Sources

1. "The Shoreline Stabilization Handbook" Northwest Regional Planning Commission. St. Albans, Vermont.
2. USDA NRCS Engineering Field Handbook, Part 650, Chapter 16, Streambank and Shoreline Protection. December 1996.

TYPAR
Geosynthetics you can trust

GRASSPROTECTA™

Installation Guide

GRASSPROTECTA is a tough, flexible, long lasting extruded polyethylene mesh. Available in two grades (Standard & Heavy) and supplied in two roll sizes (6.56' x 65.6' & 3.25' x 32.8'), GRASSPROTECTA can be effectively employed onto stable ground by unrolling and pinning adjacent and successive lengths using metal U-pins. After time the grass grows through the mesh and reaches a convenient height to be mown. The area quickly adopts a natural appearance with the grass plants intertwined with the mesh to provide permanent protection against wear. Installation is best carried out during the growing season to allow a strong interlock between mesh and grass, although GRASSPROTECTA can be installed throughout the year as appropriate.

Installation Method

A. EXISTING GRASSED AREA

1. The surface must be reasonably flat, level, firm and free-draining enough to sustain the proposed traffic. Fill shallow depressions with free-draining sandy soil. Level and consolidate. Apply seed before or after mesh installation as preferred. Alternatively, lift turf locally, fill the low area with sandy soil, consolidate and replace turf to level.
2. Prior to permanent fixing of the mesh, it is advisable to unroll it and pin loosely at each corner to allow the mesh to relax and regain its natural flatness for a minimum of one hour prior to permanent fixing. Ambient temperature variations will influence the time period required for the mesh to relax and lay flat.
3. Fixing Pins (50 per bag) – For the most effective pinning, a single roll will require a minimum four bags (200 pins). Installations of two or more rolls will require a minimum of three bags (150 pins) per roll plus one extra bag more than the total roll quantity ordered.
4. All outer edges of mesh will require pins at 12 - 14" maximum centers. Pins in the middle of the roll will be in three equally off-set rows in a chevron type pattern at 20" apart (roll width) and at maximum 30" centers (roll length). On multi-roll installations the edge pins will overlap and fix two adjacent butted edges. Pins should be inserted parallel to the mesh and flush within the structure to avoid exposure at the surface. Try to avoid inserting pins across and above the top strand of mesh. Refer to diagram for suggested pinning layout.
5. Position the mesh where required on the prepared surface. Starting from a corner of the roll and maintaining the mesh as taut and straight as possible at all times, fix the first edge (length) and then go back to the start and fix one end of the roll using the metal U-Pins (12 - 14" centres). Do not fix both ends or both edges at this stage. Always work in the same direction along the mesh length to keep the mesh taut and to avoid ripples.
6. Working progressively along and across the mesh and away from the first pinned corner, insert three more rows of pins down the center of the roll in the chevron type layout as described (three rows at 20" apart & at 30" centres down the length). Continue this until all pins are in place except for the leading edge and the roll end.
7. For single roll installations, fix the leading edge (length) and the final roll end (12 - 14" centers) to complete the operation.
8. For multi-roll installations, position the next roll for fixing. Adjacent rolls must be butt jointed and not overlapped. For sites with variations in temperature, it is recommended to leave a gap between rolls for heat expansion (See Notes). Continue across the site using this method until fully installed.

   Additional pins may be required as determined by specific site and weather conditions and to secure any bridged or raised/tented sections of mesh where evident. Installation in cold weather conditions may benefit from fixing adjacent rolls approximately 1cm apart to allow for thermal expansion in hot weather.

APPLICATIONS Vehicle access routes • Overflow car lots • Pedestrian and ADA accessibility • Golf cart paths • Walkways
Boat access • Light aircraft taxiways/parking • Slope stabilization • HGV access *(determined by ground conditions)*

Mesh unrolled

Secured with U-pins

Mesh 'Butt' joined

Mesh after installation

After installation - grass grows through quickly

TYPAR Geosynthetics
70 Old Hickory Blvd
Old Hickory, TN 37138 | USA
Tel: +1 800 541 5519
e.mail: geo.sales@pginw.com | www.typargeosynthetics.com.com

pgi

9. When satisfied that the mesh is laid flat and fixed securely, a brushing of free-draining sandy topsoil may assist in levelling any minor low spots, but is not essential. It is not advisable to completely fill or cover the mesh with soil. A dressing of seasonal fertilizer and any appropriate irrigation will encourage new grass growth to be made more rapidly through the mesh.
10. Best results are obtained by restricting trafficking until after the grass has thoroughly established through the mesh and the grass has been cut several times. This process normally takes six to eight weeks during the growing season and early use will affect grass establishment. The area can be trafficked immediately if necessary, but exposed mesh may present reduced traction in wet or frosty conditions and advisory signage to this effect may be required.
11. Mowing can be carried out as normal, but blades should be set higher for the first three to four cuts to enable the grass to grow through and fully intertwine with the structure.
12. After installation and establishment, warm weather conditions may cause localized raised 'tented' mesh areas to become apparent through expansion. These localized raised areas can be further secured by placing additional U-pins as required.

B. NEWLY SOWN LANDSCAPED AREAS

1. A seeded surface will require significantly longer for the grass to establish through the GRASSPROTECTA mesh. GRASSPROTECTA can be installed directly onto newly installed turf.
2. The site must be clear of debris, reasonably flat and level, well consolidated and free-draining enough to enable it to sustain the proposed traffic.
3. Having prepared the seedbed, grass seed can be sown before or after the mesh installation. Turfed areas are prepared and installed as normal.
4. Continue with points two through twelve above.

Notes:

- Where weak and / or waterlogged ground conditions exist, these must be improved prior to placement of GRASSPROTECTA. For occasional use by HGV's, a sub-base may be required.
- Advice on suitability for specific applications is available from TYPAR Technical advisors.
- GRASSPROTECTA can become slippery when wet (before the grass has had a chance to grow through). TYPAR strongly recommends that all newly installed mesh is cordoned off and signage erected to advise of any potential slip hazards.
- Expansion and contraction in hot climates: For installations where there may be broad +/- day to night temperature variations or where installations are carried out in spring and summer, it is recommended that a .5-1" gap is left between adjacent rolls and that rolls are pinned individually.

GRASSPROTECTA PINNING DIAGRAM

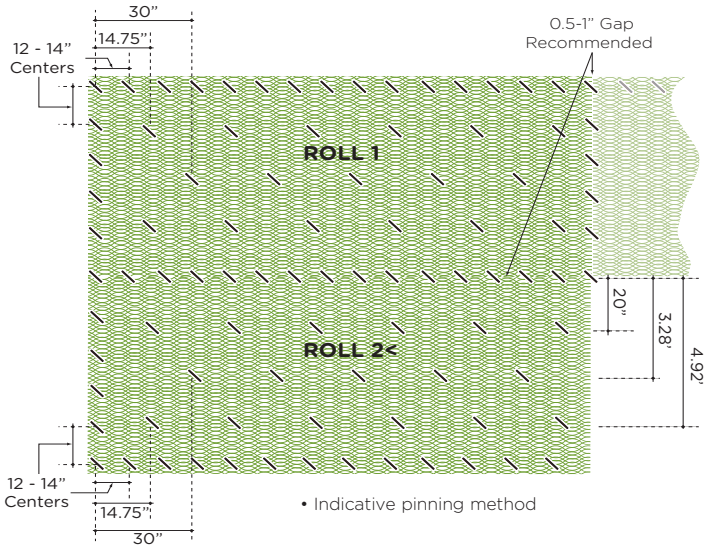

**Manufacturing tolerances (maximum +/-) to length and width apply to the final dimensions of this product. Length +19.7". Width +1.97"/-0.8". Specification Data is obtained from routine production sampling, therefore figures are nominal and may not necessarily be representative of the product supplied but will be within manufacturing tolerances.*

The information contained herein is, to the best of our knowledge, accurate in all material respects. However, since the circumstances and conditions in which such information and the products mentioned herein can be used may vary and are beyond our control, no representation or warranty, express or implied, of any nature whatsoever is or will be made and no responsibility or liability is or will be accepted by us, any of our affiliates or our or their respective directors, officers, employees or agents in relation to the accuracy or completeness or use of the information contained herein or any such products and any such liability is expressly disclaimed.

™ indicates a trade mark of Polymer Group, Inc., many of which are registered in a number of countries around the world.

TYPAR Geosynthetics
70 Old Hickory Blvd
Old Hickory, TN 37138 | USA
Tel: +1 800 541 5519
e.mail: geo.sales@pginw.com | www.typargeosynthetics.com.com

pgi